"the original portable pool"

doughboy®

Granite Ridge

Buttress Oval Pool

EXPLODED VIEW

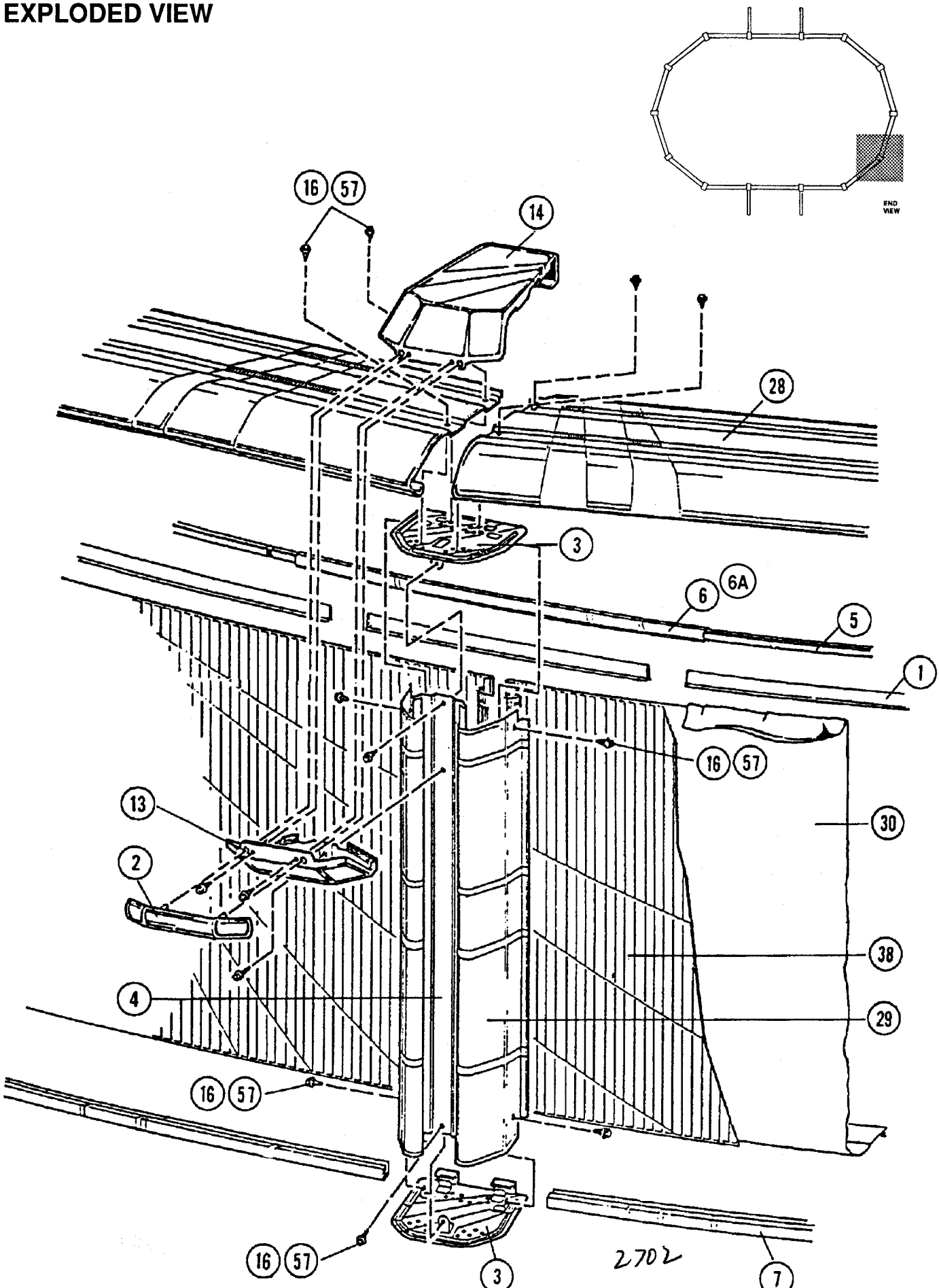

EXPLODED VIEW

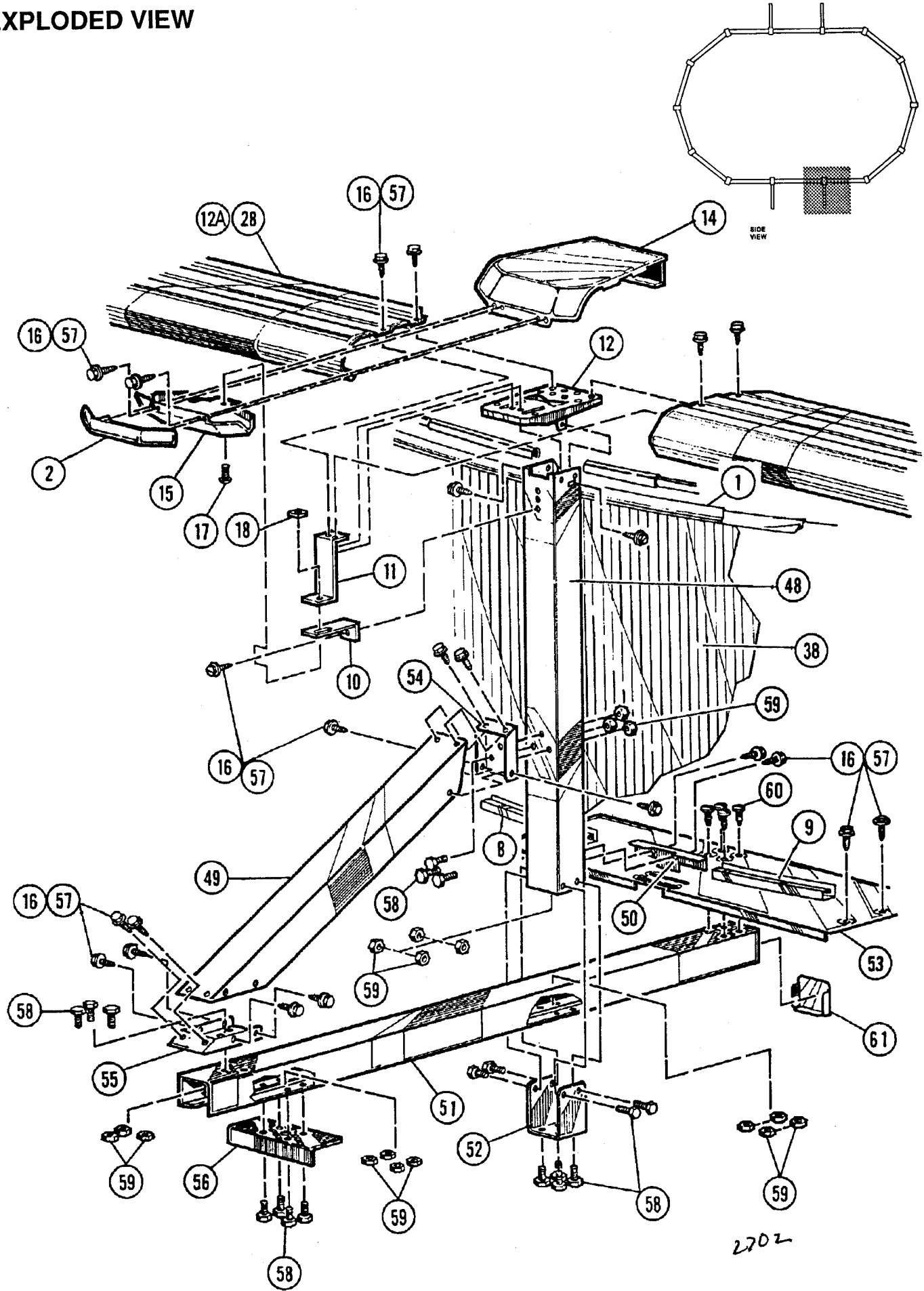

Granite Ridge Buttress Oval Pool — Parts List

ITEM #	DESCRIPTION	20' x 12' x 48" PART #	QTY.	24' x 12' x 48" PART #	QTY.	28' x 12' x 48" PART #	QTY.	32' x 12' x 48" PART #	QTY.	24' x 16' x 48" PART #	QTY.	28' x 16' x 48" PART #	QTY
	ASSEMBLY PACK	0-9902-902	1	0-9942-902	1	0-9910-902	1	0-9922-902	1	0-9946-902	1	0-9986-902	
1.	Plastic Coping, 24"	545-1001	30	545-1001	33	545-1001	37	545-1001	41	545-1001	36	545-1001	
†2.	Connector Decor Strip	340-1855	15	340-1855	17	340-1855	19	340-1855	21	340-1855	17	340-1855	19
3.	Vertical End Cap	580-1587	20	580-1587	20	580-1587	20	580-1587	20	580-1587	24	580-1587	24
4.	Vertical Center Section	580-1766	10	580-1766	10	580-1766	10	580-1766	10	580-1766	12	580-1766	12
5.	Stabilizer Rail, small dia.	583-1012	8	583-1012	8	583-1012	8	583-1012	8	583-1012	10	583-1012	10
6.	Stabilizer Rail, large dia.												
***6A.	Stabilizer Rail, large dia.	583-1011	10	583-1011	12	583-1011	14	583-1011	16	583-1011	10	583-1011	12
7.	Bottom Rail (Stamped 12, 16, 18 or 21)	589-1046	12	589-1046	12	589-1046	12	589-1046	12	589-1047	10	589-1047	10
8.	Side Rail (Stamped S)	589-1052	2	589-1052	4	589-1052	6	589-1052	8	589-1052	2	589-1052	4
9.	Transition Rail (Stamped TR)									589-1053	4	589-1053	4
10.	Outer Connector Bracket	580-1629	4	580-1629	6	580-1629	8	580-1629	10	580-1629	4	580-1629	6
11.	Connector Support Bracket	580-1654	4	580-1654	6	580-1654	8	580-1654	10	580-1654	4	580-1654	6
12.	Side Vertical Cap	580-1588	4	580-1588	6	580-1588	8	580-1588	10	580-1588	4	580-1588	6
12A.	Side Top Rail	587-1286	2	587-1286	4	587-1286	6	587-1286	8				
13.	Connector Skirt, Vertical	580-1768	10	580-1768	10	580-1768	10	580-1768	10	580-1768	12	580-1768	12
14.	Top Connector	5186-1202	14	5186-1202	16	5186-1202	18	5186-1202	20	5186-1202	16	5186-1202	18
15.	Connector, Skirt, Buttress	580-1769	4	580-1769	6	580-1769	8	580-1769	10	580-1769	4	580-1769	6
*16.	Sheet Metal Screw, # 10x3/8" Type AB	510-1000	130	510-1000	130	510-1000	130	510-1000	130	510-1000	156	510-1000	156
*17.	Machine Screw, # 10-24 x 1/2" pan head	510-1008	4	510-1008	6	510-1008	8	510-1008	10	510-1008	4	510-1008	6
*18.	Square Nut, # 10-24	321-1025	4	321-1025	6	321-1025	8	321-1025	10	321-1025	4	321-1025	6
19.	Pool Parts List	573-2702	1	573-2702	1	573-2702	1	573-2702	1	573-2702	1	573-2702	1
20.	Pool Installation Instructions	573-2655	1	573-2655	1	573-2655	1	573-2655	1	573-2655	1	573-2655	1
21.	"Read Me First" Booklet	573-2417	1	573-2417	1	573-2417	1	573-2417	1	573-2417	1	573-2417	1
22.	"Enjoy Your Pool" Booklet	573-2124	1	573-2124	1	573-2124	1	573-2124	1	573-2124	1	573-2124	1
23.	"Safety First" Booklet	573-2583	1	573-2583	1	573-2583	1	573-2583	1	573-2583	1	573-2583	1
24.	"Children Aren't . . ." Booklet	573-2338	1	573-2338	1	573-2338	1	573-2338	1	573-2338	1	573-2338	1
25.	"Pool & Spa . . ." Booklet	573-2393	1	573-2393	1	573-2393	1	573-2393	1	573-2393	1	573-2393	1
26.	Warranty Card - Metal	—	1	—	1	—	1	—	1	—	1	—	1
27.	Product Registration Card	565-1117	1	565-1117	1	565-1117	1	565-1117	1	565-1117	1	565-1117	1
	TOP RAIL PACK	0-9821-902	1	0-9821-902	1	0-9821-902	1	0-9821-902	1	0-9816-902	1	0-9809-902	2
28.	Top Rail	587-1287	12	587-1287	12	587-1287	12	587-1287	12	587-1286	16	587-1286	18
	VERTICAL CARTON	0-9710-902	1	0-9710-902	1	0-9710-902	1	0-9710-902	1	0-9712-902	1	0-9712-902	1
29.	Vertical Side Section	580-1767	20	580-1767	20	580-1767	20	580-1767	20	580-1767	24	580-1767	24
	POOL LINER CARTON												
****30.	Pool Liner	0-2012-___	1	0-2412-___	1	0-2812-___	1	0-3212-___	1	0-2416-___	1	0-2816-___	
31.	Chlorine/Winterizing Instructions	573-2421	1	573-2421	1	573-2421	1	573-2421	1	573-2421	1	573-2421	1
32.	"Warning" Decal	560-1041	3	560-1041	3	560-1041	3	560-1041	3	560-1041	3	560-1041	3
33.	Warranty Card - Liner	—	1	—	1	—	1	—	1	—	1	—	1
**34.	Repair Patch	564-1000	1	564-1000	1	564-1000	1	564-1000	1	564-1000	1	564-1000	1
35.	"Deeper Area" Decal	560-1042	2	560-1042	2	560-1042	2	560-1042	2	560-1042	2	560-1042	2
36.	"Shallow" Decal	560-1043	3	560-1043	3	560-1043	3	560-1043	3	560-1043	3	560-1043	3
37.	"Read Me First" Booklet	573-2417	1	573-2417	1	573-2417	1	573-2417	1	573-2417	1	573-2417	1
	SIDEWALL CARTON												
38.	Sidewall	0-6208-002	1	0-6208-042	1	0-6208-010	1	0-6208-022	2	0-6208-046	1	0-6208-086	1
39.	Joint Piece	580-1002	1	580-1002	1	580-1002	1	580-1002	2	580-1002	1	580-1002	1
40.	Large Cover Plate	580-1770	1	580-1770	1	580-1770	1	580-1770	2	580-1770	1	580-1770	1
41.	Small Cover Plate	580-1771	1	580-1771	1	580-1771	1	580-1771	2	580-1771	1	580-1771	1
42.	Warranty Card - Metal	—	1	—	1	—	1	—	2	—	1	—	1
43.	"Warning" Sign	560-1046	1	560-1046	1	560-1046	1	560-1046	2	560-1046	1	560-1046	1
44.	"Read Me First" Booklet	573-2417	1	573-2417	1	573-2417	1	573-2417	2	573-2417	1	573-2417	1
45.	Black Marking Pen	332-1079	1	332-1079	1	332-1079	1	332-1079	2	332-1079	1	332-1079	1
46.	Adhesive Squares	310-1034	6	310-1034	6	310-1034	6	310-1034	12	310-1034	6	310-1034	6
47.	Safety Video	573-2500	1	573-2500	1	573-2500	1	573-2500	2	573-2500	1	573-2500	1
	SUPPORT PACK 4 — CARTON	0-8888-002	1			0-8888-002	2	0-8888-002	1	0-8888-002	1		
	SUPPORT PACK 6 — CARTON			0-8888-003	1			0-8888-003	1			0-8888-003	1
48.	Side Vertical	580-1626	4	580-1626	6	580-1626	8	580-1626	10	580-1626	4	580-1626	6
49.	Vertical Brace	580-1627	4	580-1627	6	580-1627	8	580-1627	10	580-1627	4	580-1627	6
50.	Bottom Rail Connector	580-1593	4	580-1593	6	580-1593	8	580-1593	10	580-1593	4	580-1593	6
51.	Horizontal Support	580-1275	4	580-1275	6	580-1275	8	580-1275	10	580-1275	4	580-1275	6
52.	Support Bracket	580-1136	4	580-1136	6	580-1136	8	580-1136	10	580-1136	4	580-1136	6
53.	Pressure Pad	580-1273	4	580-1273	6	580-1273	8	580-1273	10	580-1273	4	580-1273	6
54.	Brace, Connector — short	580-1628	4	580-1628	6	580-1628	8	580-1628	10	580-1628	4	580-1628	6
55.	Brace, Connector — long	580-1051	4	580-1051	6	580-1051	8	580-1051	10	580-1051	4	580-1051	6
56.	Skid Plate	580-1063	4	580-1063	6	580-1063	8	580-1063	10	580-1063	4	580-1063	6
*57.	Sheet Metal Screw, No. 10x3/8" Type AB	510-1000	92	510-1000	138	510-1000	184	510-1000	230	510-1000	92	510-1000	138
*58.	High Strength Bolt 1/4"-20 x 1/2", hex head	510-1018	72	510-1018	108	510-1018	144	510-1018	180	510-1018	72	510-1018	108
*59.	Hex Nut, No. 1/4 - 20	511-1000	72	511-1000	108	511-1000	144	511-1000	180	511-1000	72	511-1000	108
*60.	Hex Washered/Sheet Metal Screw, No. 12 x 3/4"	510-1035	16	510-1035	24	510-1035	32	510-1035	40	510-1035	16	510-1035	
61.	Horizontal End Cap	580-1412	4	580-1412	6	580-1412	8	580-1412	10	580-1412	4	580-1412	

*Screws are available in most hardware stores.
**For additional patch kits order Part No. 0-5604-000.
***These stabilizers are 43 1/4" long and are used on sides, between the buttresses. Use all remaining small and large diameter rails on the ends of the pool.
****Write the number of your liner in the spaces provided here and above. #_____.
† One extra Decor Strip is provided.

2202

Granite Ridge Buttress Oval Pool— Parts List

ITEM #	DESCRIPTION	32' x 16' x 48" PART #	QTY.	40' x 16' x 48" PART #	QTY.	30' x 18' x 48" PART #	QTY.	34' x 18' x 48" PART #	QTY.	38' x 18' x 48" PART #	QTY.	41' x 21' x 48" PART #	QTY.
	ASSEMBLY PACK	0-9926-902	1	0-9906-902	1	0-9908-902	1	0-9948-902	1	0-9988-902	1	0-9911-902	1
1.	Plastic Coping, 24"	545-1001	44	545-1001	52	545-1001	42	545-1001	46	545-1001	50	545-1001	55
†2.	Connector Decor Strip	340-1855	21	340-1855	25	340-1855	21	340-1855	23	340-1855	25	340-1855	27
3.	Vertical End Cap	580-1587	24	580-1587	24	580-1587	28	580-1587	28	580-1587	28	580-1587	32
4.	Vertical Center Section	580-1766	12	580-1766	12	580-1766	14	580-1766	14	580-1766	14	580-1766	16
5.	Stabilizer Rail, small dia.	583-1012	10	583-1012	10	583-1012	10	583-1012	10	583-1012	10	583-1004	12
6.	Stabilizer Rail, large dia.											583-1005	10
***6A.	Stabilizer Rail, large dia.	583-1011	14	583-1011	18	583-1011	14	583-1011	16	583-1011	18	583-1011	8
7.	Bottom Rail (Stamped 16, 18 or 21)	589-1047	10	589-1047	10	589-1048	16	589-1048	16	589-1048	16	589-1049	14
8.	Side Rail (Stamped S)	589-1052	6	589-1052	10	589-1052	4	589-1052	6	589-1052	8	589-1052	8
9.	Transition Rail (Stamped TR)	589-1053	4	589-1053	4							589-1053	4
10.	Outer Connector Bracket	580-1629	8	580-1629	12	580-1629	6	580-1629	8	580-1629	10	580-1629	10
11.	Connector Support Bracket	580-1654	8	580-1654	12	580-1654	6	580-1654	8	580-1654	10	580-1654	10
12.	Side Vertical Cap	580-1588	8	580-1588	12	580-1588	6	580-1588	8	580-1588	10	580-1588	10
13.	Connector Skirt, Vertical	580-1768	12	580-1768	12	580-1768	14	580-1768	14	580-1768	14	580-1768	16
14.	Top Connector	5186-1202	20	5186-1202	24	5186-1202	20	5186-1202	22	5186-1202	24	5186-1202	26
15.	Connector, Skirt, Buttress	580-1769	8	580-1769	12	580-1769	6	580-1769	8	580-1769	10	580-1769	10
*16.	Sheet Metal Screw #10x3/8" Type AB	510-1000	156	510-1000	156	510-1000	186	510-1000	186	510-1000	186	510-1000	208
*17.	Machine Screw, No. 10-24 x 1/2" pan head	510-1008	8	510-1008	12	510-1008	6	510-1008	8	510-1008	10	510-1008	10
*18.	Square Nut, No. 10-24	321-1025	8	321-1025	12	321-1025	6	321-1025	8	321-1025	10	321-1025	10
19.	Pool Parts List	573-2702	1	573-2702	1	573-2702	1	573-2702	1	573-2702	1	573-2702	1
20.	Pool Installation Instructions	573-2655	1	573-2655	1	573-2655	1	573-2655	1	573-2655	1	573-2655	1
21.	"Read Me First" Booklet	573-2417	1	573-2417	1	573-2417	1	573-2417	1	573-2417	1	573-2417	1
22.	"Enjoy Your Pool" Booklet	573-2124	1	573-2124	1	573-2124	1	573-2124	1	573-2124	1	573-2124	1
23.	"Safety First" Booklet	573-2583	1	573-2583	1	573-2583	1	573-2583	1	573-2583	1	573-2583	1
24.	"Children Aren't . . ." Booklet	573-2338	1	573-2338	1	573-2338	1	573-2338	1	573-2338	1	573-2338	1
25.	"Pool & Spa . . ." Booklet	573-2393	1	573-2393	1	573-2393	1	573-2393	1	573-2393	1	573-2393	1
26.	Warranty Card - Metal	—	1	—	1	—	1	—	1	—	1	—	1
27.	Product Registration Card	565-1117	1	565-1117	1	565-1117	1	565-1117	1	565-1117	1	565-1117	1
	TOP RAIL PACK	0-9810-902	2	0-9812-902	2	0-9810-902	2	0-9810-902	1	0-9812-902	2	0-9812-902	1
								0-9812-902	1			0-9814-902	1
28.	Top Rail	587-1286	20	587-1286	24	587-1286	20	587-1286	22	587-1286	24	587-1286	26
	VERTICAL CARTON	0-9712-902	1	0-9712-902	1	0-9714-902	1	0-9714-902	1	0-9714-902	1	0-9716-902	1
29.	Vertical Side Section	580-1767	24	580-1767	24	580-1767	28	580-1767	28	580-1767	28	580-1767	32
	POOL LINER CARTON												
****30.	Pool Liner	0-3216-___	1	0-4016-___	1	0-3018-___	1	0-3418-___	1	0-3818-___	1	0-4121-___	1
31.	Chlorine/Winterizing Instructions	573-2421	1	573-2421	1	573-2421	1	573-2421	1	573-2421	1	573-2421	1
32.	"Warning" Decal	560-1041	3	560-1041	3	560-1041	3	560-1041	3	560-1041	3	560-1041	3
33.	Warranty Card - Metal	—	1	—	1	—	1	—	1	—	1	—	1
**34.	Repair Patch	564-1000	1	564-1000	1	564-1000	1	564-1000	1	564-1000	1	564-1000	1
35.	"Deeper Area" Decal	560-1042	2	560-1042	2	560-1042	2	560-1042	2	560-1042	2	560-1042	2
36.	"Shallow" Decal	560-1043	3	560-1043	3	560-1043	3	560-1043	3	560-1043	3	560-1043	3
37.	"Read Me First" Booklet	573-2417	1	573-2417	1	573-2417	1	573-2417	1	573-2417	1	573-2417	1
	SIDEWALL CARTON												
38.	Sidewall	0-6208-026	2	0-6208-006	2	0-6208-008	2	0-6208-048	2	0-6208-088	2	0-6208-011	2
39.	Joint Piece	580-1002	2	580-1002	2	580-1002	2	580-1002	2	580-1002	2	580-1002	2
40.	Large Cover Plate	580-1770	2	580-1770	2	580-1770	2	580-1770	2	580-1770	2	580-1770	2
41.	Small Cover Plate	580-1771	2	580-1771	2	580-1771	2	580-1771	2	580-1771	2	580-1771	2
42.	Warranty Card - Metal	—	2	—	2	—	2	—	2	—	2	—	2
43.	"Warning" Sign	560-1046	2	560-1046	2	560-1046	2	560-1046	2	560-1046	2	560-1046	2
44.	"Read Me First" Booklet	573-2417	2	573-2417	2	573-2417	2	573-2417	2	573-2417	2	573-2417	2
45.	Black Marking Pen	332-1079	2	332-1079	2	332-1079	2	332-1079	2	332-1079	2	332-1079	2
46.	Adhesive Squares	310-1034	12	310-1034	12	310-1034	12	310-1034	12	310-1034	12	310-1034	12
47.	Safety Video	573-2500	2	573-2500	2	573-2500	2	573-2500	2	573-2500	2	573-2500	2
	SUPPORT PACK 4 — CARTON	0-8888-002	2					0-8888-002	2	0-8888-002	1	0-8888-002	1
	SUPPORT PACK 6 — CARTON			0-8888-003	2	0-8888-003	1			0-8888-003	1	0-8888-003	1
48.	Side Vertical	580-1626	8	580-1626	12	580-1626	6	580-1626	8	580-1626	10	580-1626	10
49.	Vertical Brace	580-1627	8	580-1627	12	580-1627	6	580-1627	8	580-1627	10	580-1627	10
50.	Bottom Rail Connector	580-1593	8	580-1593	12	580-1593	6	580-1593	8	580-1593	10	580-1593	10
51.	Horizontal Support	580-1275	8	580-1275	12	580-1275	6	580-1275	8	580-1275	10	580-1275	10
52.	Support Bracket	580-1136	8	580-1136	12	580-1136	6	580-1136	8	580-1136	10	580-1136	10
53.	Pressure Pad	580-1273	8	580-1273	12	580-1273	6	580-1273	8	580-1273	10	580-1273	10
54.	Brace, Connector — short	580-1628	8	580-1628	12	580-1628	6	580-1628	8	580-1628	10	580-1628	10
55.	Brace, Connector — long	580-1051	8	580-1051	12	580-1051	6	580-1051	8	580-1051	10	580-1051	10
56.	Skid Plate	580-1063	8	580-1063	12	580-1063	6	580-1063	8	580-1063	10	580-1063	10
*57.	Sheet Metal Screw, #10 x 3/8" Type AB	510-1000	184	510-1000	276	510-1000	138	510-1000	184	510-1000	230	510-1000	230
*58.	High Strength Bolt 1/4"-20 x 1/2", hex head	510-1018	144	510-1018	216	510-1018	108	510-1018	144	510-1018	180	510-1018	180
*59.	Hex Nut, 1/4-20	511-1000	144	511-1000	216	511-1000	108	511-1000	144	511-1000	180	511-1000	180
*60.	Hex Washered/Sheet Metal Screw, #12 x 3/4"	510-1035	32	510-1035	48	510-1035	24	510-1035	32	510-1035	40	510-1035	40
61.	Horizontal End Cap	580-1412	8	580-1412	12	580-1412	6	580-1412	8	580-1412	10	580-1412	10

*Screws are available in most hardware stores.
**For additional patch kits order Part No. 0-5604-000.
***These stabilizers are 43 1/4" long and are used on sides, between the buttresses. Use all remaining small and large diameter rails on the ends of the pool.
****Write the number of your liner in the spaces provided here and above. #_____.
† One extra Decor Strip is provided.

2702