"the original portable pool"

doughboy®

Auburn Hills

Buttress Oval Pool

EXPLODED VIEW

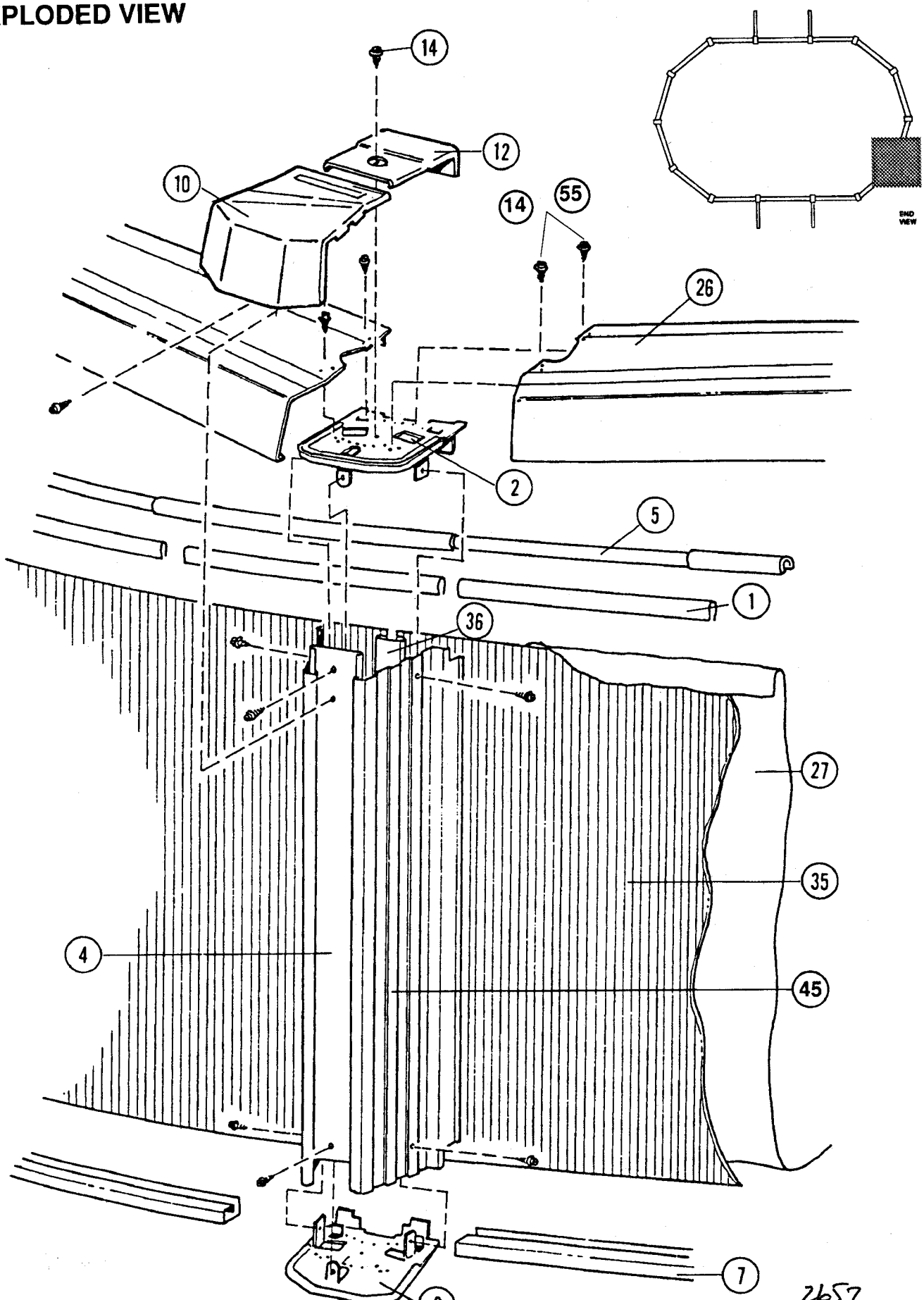

2657

EXPLODED VIEW

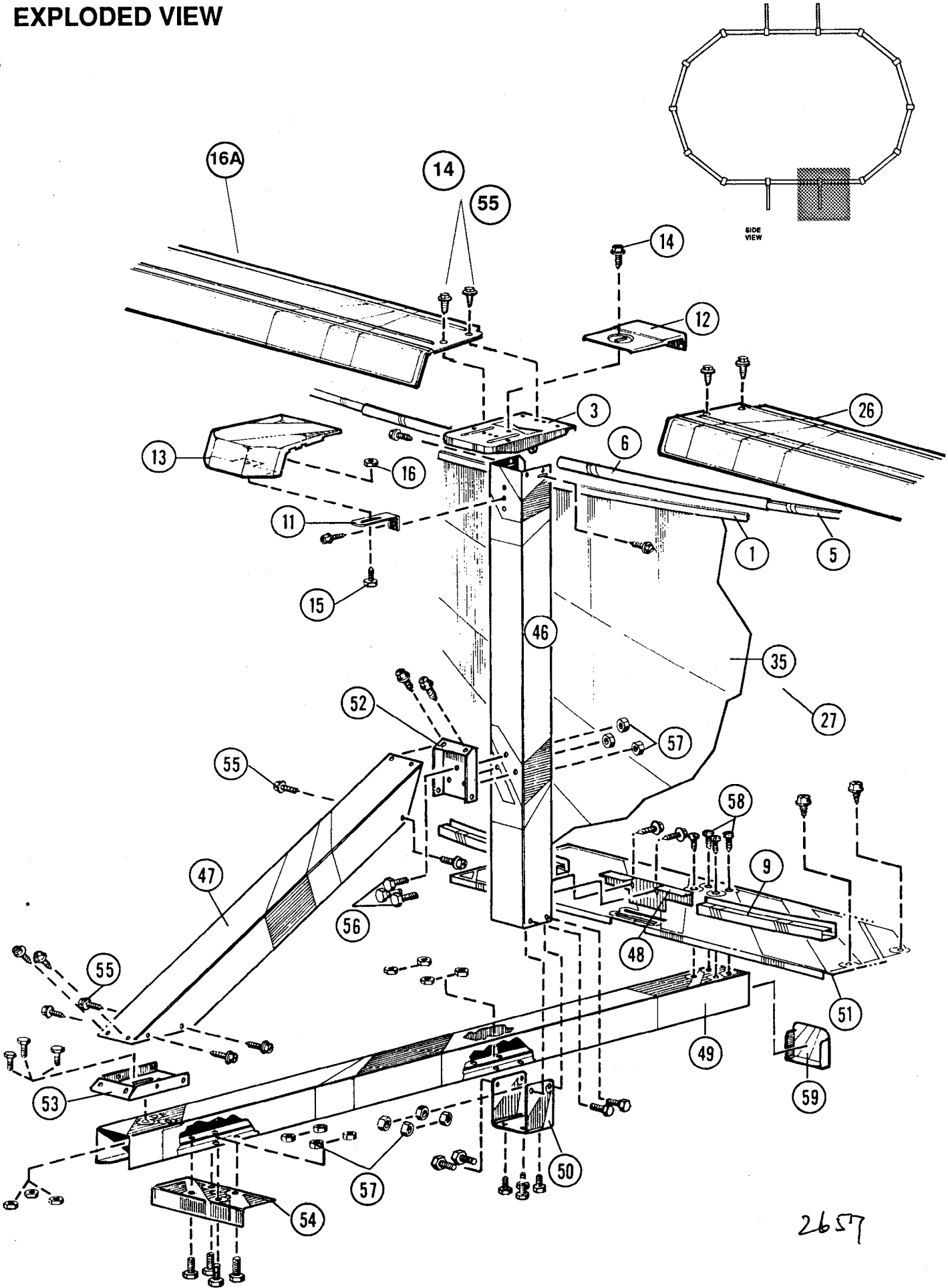

Auburn Hills Buttress Oval Pool—Parts List

		20' x 12' x 48"		24' x 12' x 48"		28' x 12' x 48"		32' x 12' x 48"		24' x 16' x 48"		28' x 16' x 48"	
ITEM #	DESCRIPTION	PART #	QTY.	PART #	QTY.	PART #	QTY.	PART #	QTY.	PART #	QTY.	PART #	QTY.
	ASSEMBLY PACK	0-9902-702	1	0-9942-702	1	0-9910-702	1	0-9922-702	1	0-9946-702	1	0-9986-702	
1.	Plastic Coping, 24"	545-1001	28	545-1001	31	545-1001	35	545-1001	39	545-1001	34	545-1001	38
2.	Vertical End Cap	580-1619	20	580-1619	20	580-1619	20	580-1619	20	580-1619	24	580-1619	24
3.	Side Vertical Cap	580-1588	4	580-1588	6	580-1588	8	580-1588	10	580-1588	4	580-1588	6
4.	Vertical Center Section	580-1670	10	580-1670	10	580-1670	10	580-1670	10	580-1670	12	580-1670	12
5.	Stabilizer Rail, small dia.	583-1012	8	583-1012	8	583-1012	8	583-1012	8	583-1012	10	583-1012	10
6.	Stabilizer Rail, large dia.												
***6A.	Stabilizer Rail, large dia.	583-1011	10	583-1011	12	583-1011	14	583-1011	16	583-1011	10	583-1011	12
7.	Bottom Rail (Stamped 12 or 16)	589-1046	12	589-1046	12	589-1046	12	589-1046	12	589-1047	10	589-1047	10
8.	Side Rail (Stamped S)	589-1052	2	589-1052	4	589-1052	6	589-1052	8	598-1052	2	589-1052	4
9.	Transition Rail (Stamped TR)									589-1053	4	589-1053	4
10.	6" Outer Connector (Ends)	580-1671	10	580-1671	10	580-1671	10	580-1671	10	580-1671	12	580-1671	12
11.	Outer Connector Bracket	580-1629	4	580-1629	6	580-1629	8	580-1629	10	580-1629	4	580-1629	6
12.	Inner Connector	5186-1187	14	5186-1187	16	5186-1187	18	5186-1187	20	5186-1187	16	5186-1187	18
13.	Outer Connector, 6" x 3" (Side)	580-1695	4	580-1695	6	580-1695	8	580-1695	10	580-1695	4	580-1695	6
*14.	#10 x 3/8" Lg. Hex Washer Hd. Screw	510-1000	130	510-1000	130	510-1000	130	510-1000	130	510-1000	156	510-1000	156
*15.	Machine Screw, #10-24 x 1/2" pan head	510-1008	4	510-1008	6	510-1008	8	510-1008	10	510-1008	4	510-1008	6
*16.	Square Nut, #10-24	321-1025	4	321-1025	6	321-1025	8	321-1025	10	321-1025	4	321-1025	6
16A	Side Top Rail	587-1219	2	587-1219	4	587-1219	6	587-1219	8				
17.	Pool Parts List	573-2657	1	573-2657	1	573-2657	1	573-2657	1	573-2657	1	573-2657	1
18.	Pool Installation Instructions	573-2655	1	573-2655	1	573-2655	1	573-2655	1	573-2655	1	573-2655	1
19.	"Read Me First" Booklet	573-2417	1	573-2417	1	573-2417	1	573-2417	1	573-2417	1	573-2417	1
20.	"Enjoy Your Pool" Booklet	573-2124	1	573-2124	1	573-2124	1	573-2124	1	573-2124	1	573-2124	1
21.	"Safety First" Booklet	573-2583	1	573-2583	1	573-2583	1	573-2583	1	573-2583	1	573-2583	1
22.	"Children Aren't . . ." Brochure	573-2338	1	573-2338	1	573-2338	1	573-2338	1	573-2338	1	573-2338	1
23.	"Pool & Spa . . ." Brochure	573-2393	1	573-2393	1	573-2393	1	573-2393	1	573-2393	1	573-2393	1
24.	Warranty Card - Metal	—	1	—	1	—	1	—	1	—	1	—	1
25.	Product Registration Card	565-1117	1	565-1117	1	565-1117	1	565-1117	1	565-1117	1	565-1117	1
	TOP RAIL PACK	0-9803-702	1	0-9803-702	1	0-9803-702	1	0-9803-702	1	0-9816-702	1	0-9818-702	1
26.	Top Rail	587-1218	12	587-1218	12	587-1218	12	587-1218	12	587-1219	16	587-1219	18
	POOL LINER CARTON												
****27.	Pool Liner	0-2012-___	1	0-2412-___	1	0-2812-___	1	0-3212-___	1	0-2416-___	1	0-2816-___	1
28.	Chlorine/Winterizing Instructions	573-2421	1	573-2421	1	573-2421	1	573-2421	1	573-2421	1	573-2421	
29.	"Warning" Decal	560-1041	3	560-1041	3	560-1041	3	560-1041	3	560-1041	3	560-1041	
30.	Warranty Card - Liner	—	1	—	1	—	1	—	1	—	1	—	1
**31.	Repair Patch	564-1000	1	564-1000	1	564-1000	1	564-1000	1	564-1000	1	564-1000	1
32.	"Deeper Area" Decal	560-1042	2	560-1042	2	560-1042	2	560-1042	2	560-1042	2	560-1042	2
33.	"Shallow" Decal	560-1043	3	560-1043	3	560-1043	3	560-1043	3	560-1043	3	560-1043	3
34.	"Read Me First" Booklet	573-2417	1	573-2417	1	573-2417	1	573-2417	1	573-2417	1	573-2417	1
	SIDEWALL CARTON												
35.	Sidewall	0-0308-002	1	0-0308-042	1	0-0308-010	1	0-0308-022	2	0-0308-046	1	0-0308-086	1
36.	Joint Piece	580-1002	1	580-1002	1	580-1002	1	580-1002	2	580-1002	1	580-1002	1
37.	Large Cover Plate	580-1673	1	580-1673	1	580-1673	1	580-1673	2	580-1673	1	580-1673	1
38.	Small Cover Plate	580-1672	1	580-1672	1	580-1672	1	580-1672	2	580-1672	1	580-1672	1
39.	Warranty Card - Metal	—	1	—	1	—	1	—	2	—	1	—	1
40.	"Warning" Sign	560-1046	1	560-1046	1	560-1046	1	560-1046	2	560-1046	1	560-1046	1
41.	"Read Me First" Booklet	573-2417	1	573-2417	1	573-2417	1	573-2417	2	573-2417	1	573-2417	1
42.	Black Marking Pen	332-1079	1	332-1079	1	332-1079	1	332-1079	2	332-1079	1	332-1079	1
43.	Adhesive Squares	310-1034	6	310-1034	6	310-1034	6	310-1034	12	310-1034	6	310-1034	6
44.	Safety Video	573-2500	1	573-2500	1	573-2500	1	573-2500	2	573-2500	1	573-2500	1
	VERTICAL PACK	0-9710-702	1	0-9710-702	1	0-9710-702	1	0-9710-702	1	0-9712-702	1	0-9712-702	1
45.	Vertical Side Section	580-1669	20	580-1669	20	580-1669	20	580-1669	20	580-1669	24	580-1669	24
	SUPPORT PACK 4 — CARTON	0-8888-017	1			0-8888-017	2	0-8888-017	1	0-8888-017	1		
	SUPPORT PACK 6 — CARTON			0-8888-018	1			0-8888-018	1			0-8888-018	1
46.	Side Vertical	580-1676	4	580-1676	6	580-1676	8	580-1676	10	580-1676	4	580-1676	6
47.	Vertical Brace	580-1530	4	580-1530	6	580-1530	8	580-1530	10	580-1530	4	580-1530	6
48.	Bottom Rail Connector	580-1593	4	580-1593	6	580-1593	8	580-1593	10	580-1593	4	580-1593	6
49.	Horizontal Support	580-1275	4	580-1275	6	580-1275	8	580-1275	10	580-1275	4	580-1275	6
50.	Support Bracket	580-1136	4	580-1136	6	580-1136	8	580-1136	10	580-1136	4	580-1136	6
51.	Pressure Pad	580-1273	4	580-1273	6	580-1273	8	580-1273	10	580-1273	4	580-1273	6
52.	Brace, Connector — short	580-1528	4	580-1528	6	580-1528	8	580-1528	10	580-1528	4	580-1528	6
53.	Brace, Connector — long	580-1051	4	580-1051	6	580-1051	8	580-1051	10	580-1051	4	580-1051	6
54.	Skid Plate	580-1063	4	580-1063	6	580-1063	8	580-1063	10	580-1063	4	580-1063	6
*55.	#10 x 3/8" Lg. Hex Washer Hd. Screw	510-1000	92	510-1000	138	510-1000	184	510-1000	230	510-1000	92	510-1000	138
*56.	High Strength Bolt 1/4"-20 x 1/2", hex head	510-1018	72	510-1018	108	510-1018	144	510-1018	180	510-1018	72	510-1018	108
*57.	Hex Nut, 1/4-20	511-1000	72	511-1000	108	511-1000	144	511-1000	180	511-1000	72	511-1000	108
*58.	Hex Washered/Sheet Metal Screw, #12 x 3/4"	510-1035	16	510-1035	24	510-1035	32	510-1035	40	510-1035	16	510-1035	24
59.	Horizontal End Cap	580-1412	4	580-1412	6	580-1412	8	580-1412	10	580-1412	4	580-1412	6

*Screws are available in most hardware stores.

**For additional patch kits order Part No. 0-5604-000.

***These stabilizers are 43 1/4" long and are used on the sides between the buttresses. Use all remaining small and large stabilizers on the ends of the pool.

****Write the number of your liner in the spaces provided here and above. #_____.

2651

Auburn Hills Buttress Oval Pool—Parts List

ITEM #	DESCRIPTION	32' x 16' x 48" PART #	QTY.	40' x 16' x 48" PART #	QTY.	30' x 18' x 48" PART #	QTY.	34' x 18' x 48" PART #	QTY.	38' x 18' x 48" PART#	QTY.	41' x 21' x 48" PART#	QTY.
	ASSEMBLY PACK	0-9926-702	1	0-9906-702	1	0-9908-702	1	0-9948-702	1	0-9988-702	1	0-9911-702	1
1.	Plastic Coping, 24"	545-1001	42	545-1001	50	545-1001	40	545-1001	44	545-1001	48	545-1001	53
2.	Vertical End Cap	580-1619	24	580-1619	24	580-1619	28	580-1619	28	580-1619	28	580-1619	32
3.	Side Vertical Cap	580-1588	8	580-1588	12	580-1588	6	580-1588	8	580-1588	10	580-1588	10
4.	Vertical Center Section	580-1670	12	580-1670	12	580-1670	14	580-1670	14	580-1670	14	580-1670	16
5.	Stabilizer Rail, small dia.	583-1012	10	583-1012	10	583-1012	10	583-1012	10	583-1012	10	583-1004	12
6.	Stabilizer Rail, large dia.											583-1005	10
***6A.	Stabilizer Rail, large dia.	583-1011	14	583-1011	18	583-1011	14	583-1011	16	583-1011	18	583-1011	8
7.	Bottom Rail (Stamped 16, 18 or 21)	589-1047	10	589-1047	10	589-1048	16	589-1048	16	589-1048	16	589-1049	14
8.	Side Rail (Stamped S)	589-1052	6	589-1052	10	589-1052	4	589-1052	6	589-1052	8	589-1052	8
9.	Transition Rail (Stamped TR)	589-1053	4	589-1053	4							589-1053	4
10.	6" Outer Connector (Ends)	580-1671	12	580-1671	12	580-1671	14	580-1671	14	580-1671	14	580-1671	16
11.	Outer Connector Bracket	580-1629	8	580-1629	12	580-1629	6	580-1629	8	580-1629	10	580-1629	10
12.	Inner Connector	5186-1187	20	5186-1187	24	5186-1187	20	5186-1187	22	5186-1187	24	5186-1187	26
13.	Outer Connector, 6" x 3" (Side)	580-1695	8	580-1695	12	580-1695	6	580-1695	8	580-1695	10	580-1695	10
*14.	#10 x 3/8" Lg. Hex Washer Hd. Screw	510-1000	156	510-1000	156	510-1000	186	510-1000	186	510-1000	186	510-1000	208
*15.	Machine Screw, #10-24 x 1/2" pan head	510-1008	8	510-1008	12	510-1008	6	510-1008	8	510-1008	10	510-1008	10
*16.	Square Nut, #10-24	321-1025	8	321-1025	12	321-1025	6	321-1025	8	321-1025	10	321-1025	10
17.	Pool Parts List	573-2657	1	573-2657	1	573-2657	1	573-2657	1	573-2657	1	573-2657	1
18.	Pool Installation Instructions	573-2655	1	573-2655	1	573-2655	1	573-2655	1	573-2655	1	573-2655	1
19.	"Read Me First" Booklet	573-2417	1	573-2417	1	573-2417	1	573-2417	1	573-2417	1	573-2417	1
20.	"Enjoy Your Pool" Booklet	573-2124	1	573-2124	1	573-2124	1	573-2124	1	573-2124	1	573-2124	1
21.	"Safety First" Booklet	573-2583	1	573-2583	1	573-2583	1	573-2583	1	573-2583	1	573-2583	1
22.	"Children Aren't . . ." Brochure	573-2338	1	573-2338	1	573-2338	1	573-2338	1	573-2338	1	573-2338	1
23.	"Pool & Spa . . ." Brochure	573-2393	1	573-2393	1	573-2393	1	573-2393	1	573-2393	1	573-2393	1
24.	Warranty Card - Metal	—	1	—	1	—	1	—	1	—	1	—	1
25.	Product Registration Card	565-1117	1	565-1117	1	565-1117	1	565-1117	1	565-1117	1	565-1117	1
	TOP RAIL PACK	0-9810-702	2	0-9812-702	2	0-9810-702	2	0-9810-702	1	0-9812-702	2	0-9812-702	1
								0-9812-702	1			0-9814-702	1
26.	Top Rail	587-1219	20	587-1219	24	587-1219	20	587-1219	22	587-1219	24	587-1219	26
	POOL LINER CARTON												
****27.	Pool Liner	0-3216-___	1	0-4016-___	1	0-3018-___	1	0-3418-___	1	0-3818-___	1	0-4121-___	1
28.	Chlorine/Winterizing Instructions	573-2421	1	573-2421	1	573-2421	1	573-2421	1	573-2421	1	573-2421	1
29.	"Warning" Decal	560-1041	3	560-1041	3	560-1041	3	560-1041	3	560-1041	3	560-1041	3
30.	Warranty Card - Liner	—	1	—	1	—	1	—	1	—	1	—	1
**31.	Repair Patch	564-1000	1	564-1000	1	564-1000	1	564-1000	1	564-1000	1	564-1000	1
32.	"Deeper Area" Decal	560-1042	2	560-1042	2	560-1042	2	560-1042	2	560-1042	2	560-1042	2
33.	"Shallow" Decal	560-1043	3	560-1043	3	560-1043	3	560-1043	3	560-1043	3	60-1043	3
34.	"Read Me First" Booklet	573-2417	1	573-2417	1	573-2417	1	573-2417	1	573-2417	1	573-2417	1
	SIDEWALL CARTON												
35.	Sidewall	0-0308-026	2	0-0308-006	2	0-0308-008	2	0-0308-048	2	0-0308-088	2	0-0308-011	2
36.	Joint Piece	580-1002	2	580-1002	2	580-1002	2	580-1002	2	580-1002	2	580-1002	2
37.	Large Cover Plate	580-1673	2	580-1673	2	580-1673	2	580-1673	2	580-1673	2	580-1673	2
38.	Small Cover Plate	580-1672	2	580-1672	2	580-1672	2	580-1672	2	580-1672	2	580-1672	2
39.	Warranty Card - Metal	—	2	—	2	—	2	—	2	—	2	—	2
40.	"Warning" Sign	560-1046	2	560-1046	2	560-1046	2	560-1046	2	560-1046	2	560-1046	2
41.	"Read Me First" Booklet	573-2417	2	573-2417	2	573-2417	2	573-2417	2	573-2417	2	573-2417	2
42.	Black Marking Pen	332-1079	2	332-1079	2	332-1079	2	332-1079	2	332-1079	2	332-1079	2
43.	Adhesive Squares	310-1034	12	310-1034	12	310-1034	12	310-1034	12	310-1034	12	310-1034	12
44.	Safety Video	573-2500	2	573-2500	2	573-2500	2	573-2500	2	573-2500	2	573-2500	2
	VERTICAL PACK	0-9712-702	1	0-9712-702	1	0-9714-702	1	0-9714-702	1	0-9714-702	1	0-9716-702	1
45.	Vertical Side Section	580-1669	24	580-1669	24	580-1669	28	580-1669	28	580-1669	28	580-1669	32
	SUPPORT PACK 4 — CARTON	0-8888-017	2					0-8888-017	2	0-8888-017	1	0-8888-017	1
	SUPPORT PACK 6 — CARTON			0-8888-018	2	0-8888-018	1			0-8888-018	1	0-8888-018	1
46.	Side Vertical	580-1676	8	580-1676	12	580-1676	6	580-1676	8	580-1676	10	580-1676	10
47.	Vertical Brace	580-1530	8	580-1530	12	580-1530	6	580-1530	8	580-1530	10	580-1530	10
48.	Bottom Rail Connector	580-1593	8	580-1593	12	580-1593	6	580-1593	8	580-1593	10	580-1593	10
49.	Horizontal Support	580-1275	8	580-1275	12	580-1275	6	580-1275	8	580-1275	10	580-1275	10
50.	Support Bracket	580-1136	8	580-1136	12	580-1136	6	580-1136	8	580-1136	10	580-1136	10
51.	Pressure Pad	580-1273	8	580-1273	12	580-1273	6	580-1273	8	580-1273	10	580-1273	10
52.	Brace, Connector — short	580-1528	8	580-1528	12	580-1528	6	580-1528	8	580-1528	10	580-1528	10
53.	Brace, Connector — long	580-1051	8	580-1051	12	580-1051	6	580-1051	8	580-1051	10	580-1051	10
54.	Skid Plate	580-1063	8	580-1063	12	580-1063	6	580-1063	8	580-1063	10	580-1063	10
*55.	#10 x 3/8" Lg. Hex Washer Hd. Screw	510-1000	184	510-1000	276	510-1000	138	510-1000	184	510-1000	230	510-1000	230
*56.	High Strength Bolt 1/4"-20 x 1/2", hex head	510-1018	144	510-1018	216	510-1018	108	510-1018	144	510-1018	180	510-1018	180
*57.	Hex Nut, 1/4-20	511-1000	144	511-1000	216	511-1000	108	511-1000	144	511-1000	180	511-1000	180
*58.	Hex Washered/Sheet Metal Screw, #12 x 3/4"	510-1035	32	510-1035	48	510-1035	24	510-1035	32	510-1035	40	510-1035	40
59.	Horizontal End Cap	580-1412	8	580-1412	12	580-1412	6	580-1412	8	580-1412	10	580-1412	10

*Screws are available in most hardware stores.
**For additional patch kits order Part No. 0-5604-000.
***These stabilizers are 43 1/4" long and are used on the sides between the buttresses. Use all remaining small and large stabilizers on the ends of the pool.
****Write the number of your liner in the spaces provided here and above. #_____.

2657